# Sketching

Make a rough drawing of.

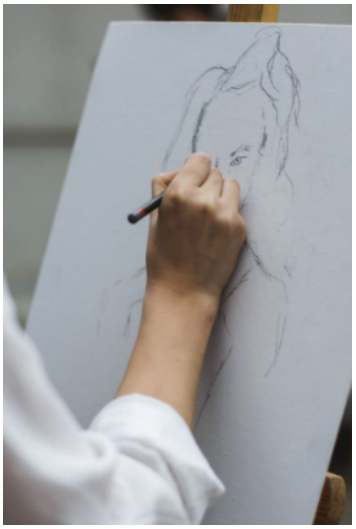

# Contrast

Using dark colour and brighter colours to create a more realistic feel to the art.

# Negative space

Negative space is the background or the area that surrounds the subject of the work.

# Observational Sketch

Observational drawing is drawing what you see.

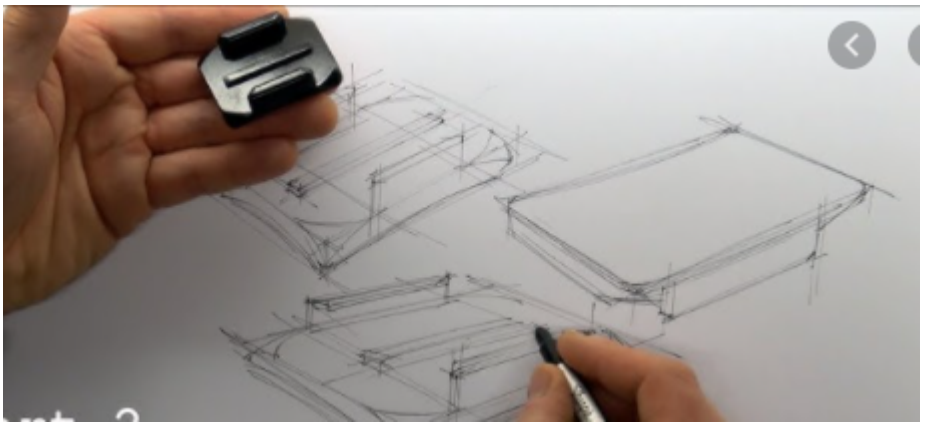

# Cross hatching

Line drawing that describes light and shadow.

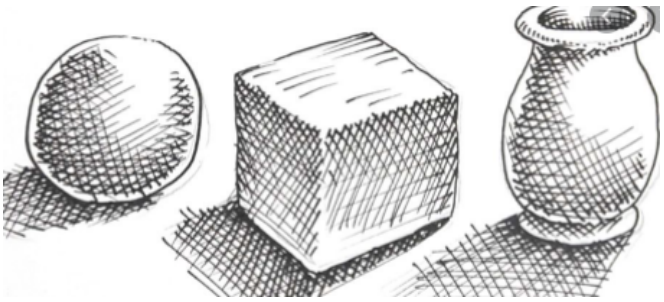

# Tonal Grading

Steps going from light to dark.